ENOLGAS
www.enolgasusa.com

12426 SERIES
FORGED BRASS GAS BALL VALVE FLARE X NPT

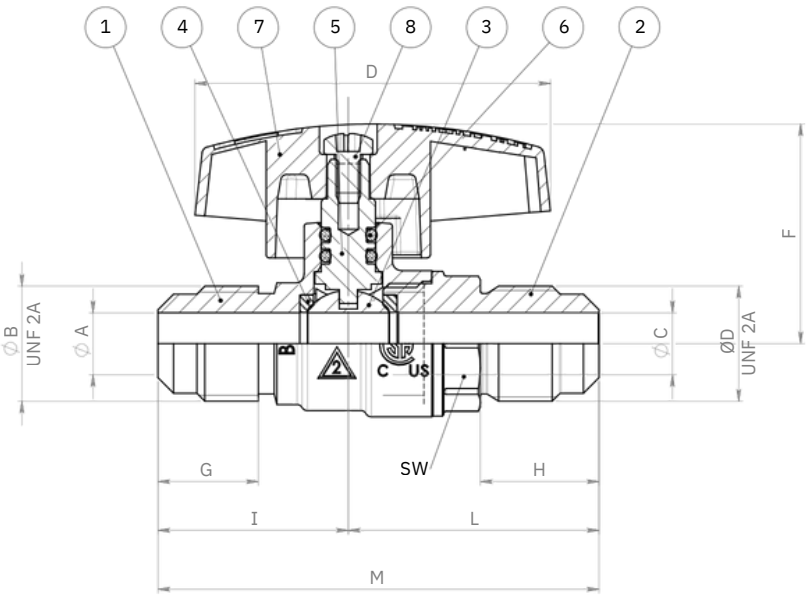

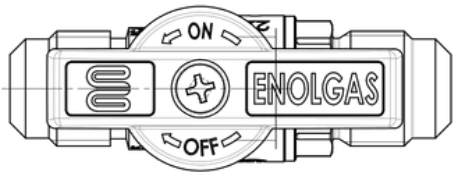

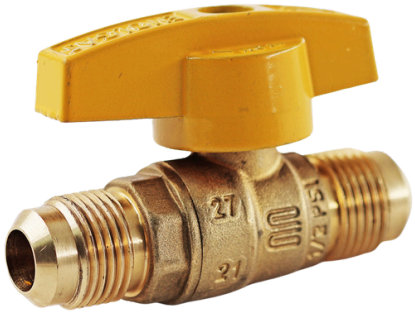

C US

MADE IN ITALY

SPECIFICATION
FORGED BRASS BODY
SIZES: 1/2"X1/2"-3/8"X3/8"
CONNECTION: FLARE X NPT
CERTIFICATIONS: CSA
STANDARD: ANSI
PRESSURE: 72 PSI (GAS)
DIRECTION OF FLOW: IN BOTH WAYS
TEMPERATURE RANGE: -4° F TO 125° F
APPLICATION: HOT AND COLD WATER, COMPRESSED AIR, OILS, ALL KINDS OF GASES, NON-AGGRESSIVE FLUIDS
ROTATION OF THE LEVER OF 90°

COMPONENTS

N°	DESCRIPTION	MATERIAL
1	BODY	CW617N
2	END ADAPTER	CW614N
3	BALL	CW614N
4	BALL SEAT	PTFE
5	STEM	CW614N
6	O-RING	HNBR
7	LEVER	ALUMINUM EN AB46100
8	SCREW	STEEL

DIMENSIONS — INCHES

CODE	SIZE	øA	øB	øC	D	E	F	G	H	I	L	øM	SW
12426-005-005	1/2"x1/2"	0.40	3/4"x16	0.40	3/4"x16	2.30	1.42	0.65	0.65	1.23	1.62	2.85	0.98